AM/FM RADIO IC

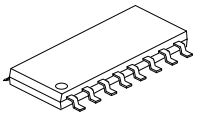

SOP-16

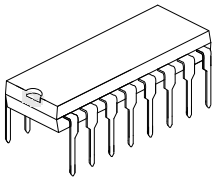

DIP-16

■ DESCRIPTION

The UTC **TA2003** is AM/FM Radio IC (FM F/E + AM/FM IF) which is designed for AM/FM Radios.

■ FEATURES

* FM IFT, AM IFT and FM Detector Coil are unnecessary.
* Operating Supply Voltage Range
* $V_{CC(opr)}$ = 1.8 ~ 7V (Ta=25°C)

■ ORDERING INFORMATION

Ordering Number		Package	Packing
Lead Free	Halogen Free		
TA2003L-S16-R	TA2003G-S16-R	SOP-16	Tape Reel
TA2003L-D16-T	TA2003G-D16-T	DIP-16	Tube

TA2003L-S16-R (1)Packing Type (2)Package Type (3)Lead Free	(1) R: Tape Reel, T: Tube (2) S16: SOP-16, D16: DIP-16 (3) G: Halogen Free, L: Lead Free

■ EXPLANATION OF TERMINAL

Terminal Voltage: Typical DC voltage at Ta=25°C, V_{CC}=3V and no signal with Test Circuit

PIN NO.	PIN NAME	DESCRIPTION	INTERNAL CIRCUIT	TERMINAL VOLTAGE	
1	FM AF IN	Input of FM RF Amplifier	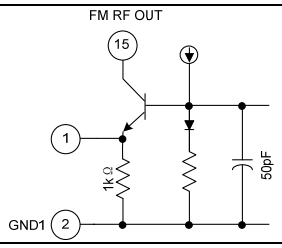	0	0.7
2	GND1	GND for RF, DSC and MIX Stage		0	0
3	FM MIX	Output of FM MIX	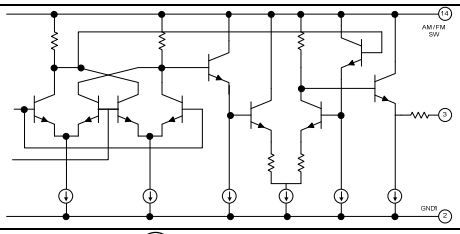	0.4	1.7
4	AM MIX	Output of AM MIX	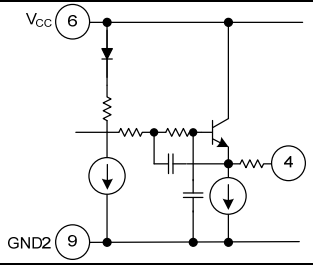	0.6	0
5	AGC	By pass of AM AGC	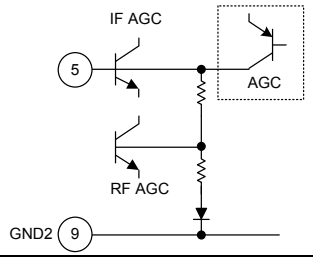	0	0
6	V_{CC}			3.0	3.0
7	AM IF IN	Input of AM IF Amplifier	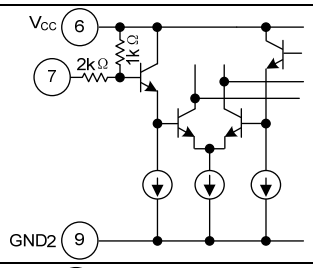	3.0	3.0
8	FM IF IN	Input of FM IF Amplifier	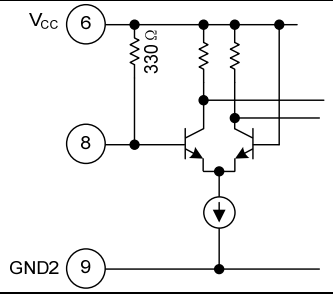	3.0	3.0

■ EXPLANATION OF TERMINAL

PIN NO.	PIN NAME	DESCRIPTION	INTERNAL CIRCUIT	TERMINAL VOLTAGE	
9	GND2	GND for IF stage		0	0
10	QUAD	FM QUAD Detector Ceramic Discriminator is connected. Recommendation CDA 10.7MG31 (MURATA MFG. CO., LTD)	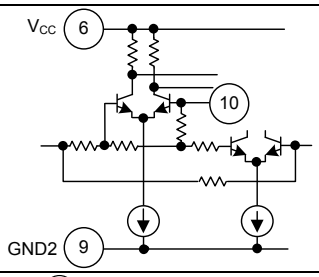	2.5	2.2
11	DET OUT	Output of FM/AM Detector	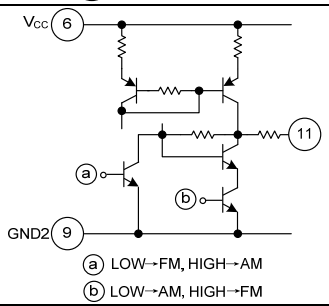	1.4	1.1
12	AM OSC	AM local Oscillator Terminal Oscillator Coil is connected.	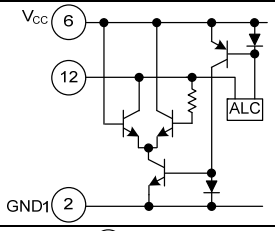	3.0	3.0
13	FM OSC	FM local Oscillator Terminal Oscillator Coil is connected	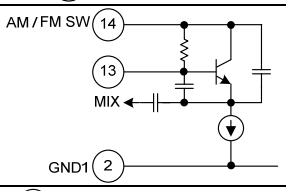	0.9	3.0
14	AM/FM SW	AM/FM switch connected to Pin14 V_{CC}→FM mode Pin14 OPEN→AM mode	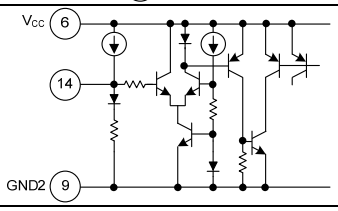	0.9	3.0
15	FM RF OUT	FM RF Coil is connected	cf. PIN 1	3.0	3.0
16	AM RF IN	Input of AM RF Amplifier	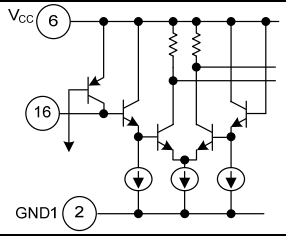	3.0	3.0

■ BLOCK DIAGRAM

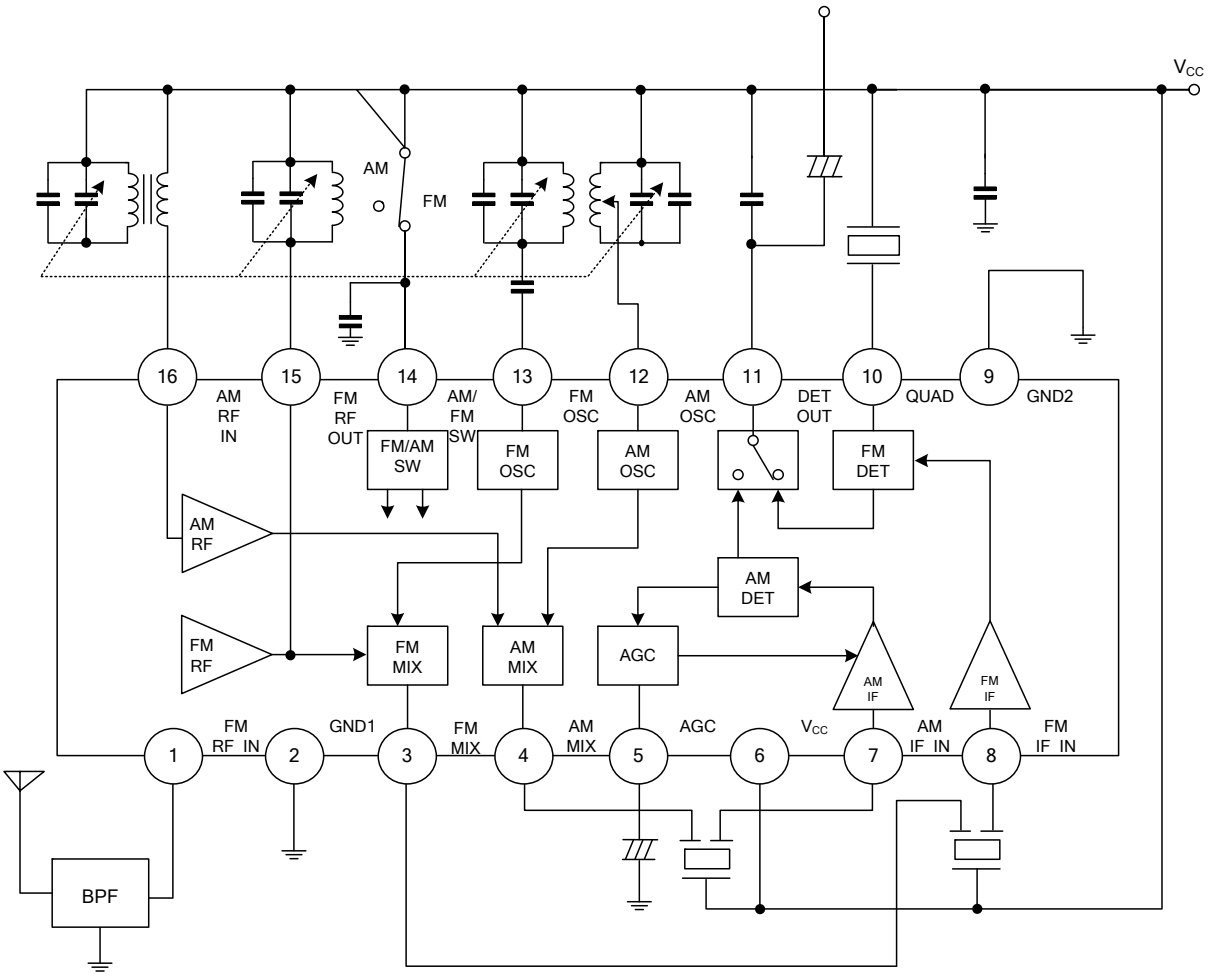

■ ABSOLUTE MAXIMUM RATING (Ta=25°C)

PARAMETER		SYMBOL	RATINGS	UNIT
Supply Voltage		V_{CC}	8	V
Power Dissipation	DIP-16	P_D	750	mW
	SOP-16		350	
Operating Temperature		T_{OPR}	-25 ~ 75	°C
Storage Temperature		T_{STG}	-55 ~ 150	°C

Note: Absolute maximum ratings are those values beyond which the device could be permanently damaged. Absolute maximum ratings are stress ratings only and functional device operation is not implied.

■ ELECTRICAL CHARACTERISTICS

Unless otherwise specified, Ta=25°C, V_{CC}=3V, FE: f = 98MHz, f_m = 1KHz,
FM IF: f = 10.7MHz, △f=±22.5kHz, f_m = 1KHz
AM: f = 1MHz, MOD = 30%, f_m = 1 KHz

PARAMETER		SYMBOL	TEST CONDITIONS	MIN	TYP	MAX	UNIT	TEST CIRCUIT
Supply Current		I_{CC} (FM)	FM Mode, Vin=0		10.5	16.5	mA	1
		I_{CC} (AM)	AM Mode, Vin=0		5.0	8.0		1
F/E	Input Limiting Voltage	Vin (lim)	-3dB limiting point		12		dBμV EMF	1
	Quiescent Sensitivity	Q_S	S/N=30dB		12		dBμV EMF	1
	Local OSC Voltage	V_{OSC}	f_{OSC}=108MHz	160	240	320	mVrms	2
	Local OSC Stop Voltage	V_{stop} (FM)	Vin=0		1.2		V	2
FM IF	Input Limiting Voltage	Vin(lim)IF	-3dB limiting point	42	47	52	dBμV EMF	1
	Recovered Output Voltage	V_{OD}	Vin=80dBμV EMF	50	70	90	mVrms	1
	Signal To Noise Ratio	S/N	Vin=80dBμV EMF		62		dB	1
	Total Harmonic Distortion	THD	Vin=80dBμV EMF		0.4		%	1
	AM Rejection Ratio	AMR	Vin=80dBμV EMF		33		dB	1
AM	Voltage Gain	G_V	Vin=27dBμV EMF	15	32	50	mVrms	1
	Recovered Output Voltage	V_{OD}	Vin=60dBμV EMF	35	60	85	mVrms	1
	Signal To Noise Ratio	S/N	Vin=60dBμV EMF		43		dB	1
	Total Harmonic Distortion	THD	Vin=60dBμV EMF		1.0		%	1
	Local OSC Stop Voltage	V_{stop} (AM)	Vin=0		1.6		V	1

■ COIL DATA (TEST CIRCUIT)

COIL NO.	TEST FREQ (Hz)	L (μH)	C_O (pF)	Q_O	TURNS					WIRE (mm∅)
					1-2	2-3	1-3	1-4	4-6	
L1 FM RF	100M			100				2.25		0.5 UEW
L2 FM OSC	100M			100			1.75			0.5 UEW
L3 AM OSC	796K	268		125	14	86				0.06 UEW

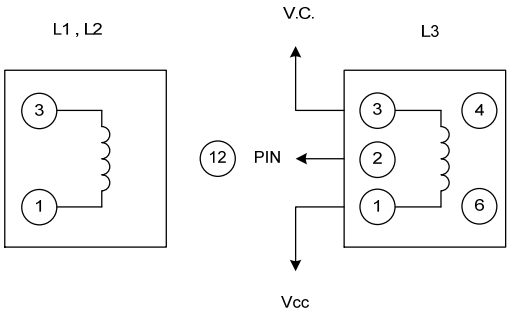

■ TEST CIRCUIT1

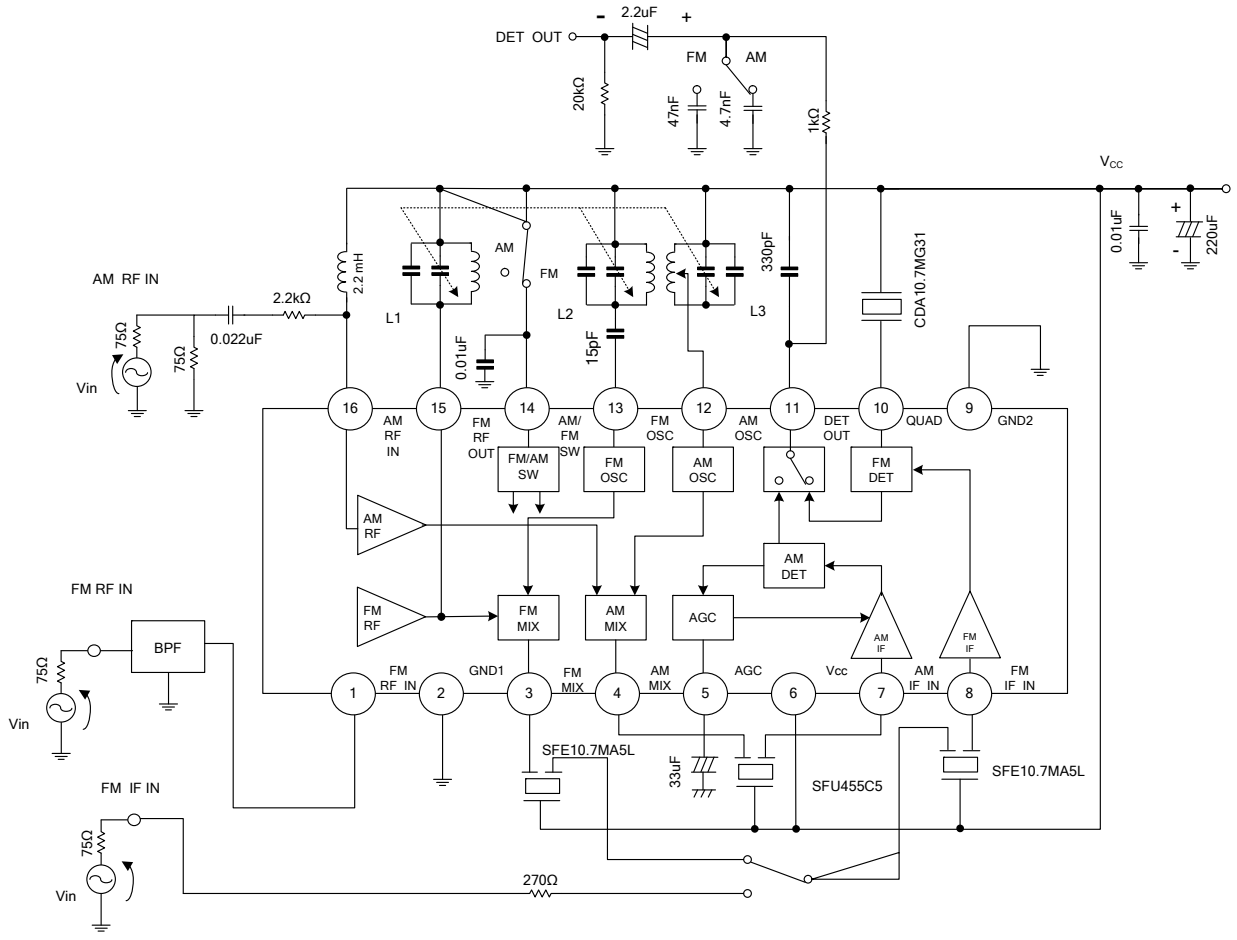

■ TEST CIRCUIT2